Farnell Codes : 4158751 - 4158763

RE 40 ∅40 mm, Graphite Brushes, 150 Watt

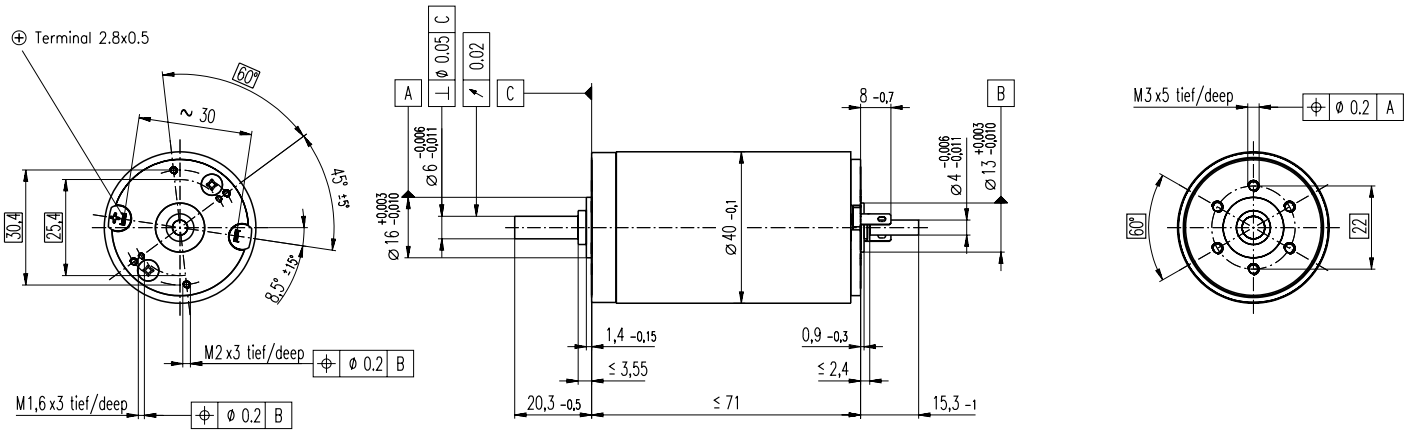

Stock program
Standard program
Special program (on request!)

Order Number

			148866	148867	148877	218008	218009	218010	218011	218012	218013	218014	218015
Motor Data													
1	Assigned power rating	W	150	150	150	150	150	150	150	150	150	150	150
2	Nominal voltage	Volt	12.0	24.0	48.0	48.0	48.0	48.0	48.0	48.0	48.0	48.0	48.0
3	No load speed	rpm	6920	7580	7580	6420	5560	3330	2690	2130	1710	1420	987
4	Stall torque	mNm	1690	2290	2500	1990	1760	996	796	641	512	415	289
5	Speed/torque gradient	rpm/mNm	4.11	3.32	3.04	3.23	3.17	3.36	3.39	3.35	3.37	3.44	3.45
6	No load current	mA	241	137	69	54	44	22	17	13	10	8	5
7	Starting current	A	103	75.9	41.4	28.0	21.4	7.26	4.69	3.00	1.92	1.29	0.627
8	Terminal resistance	Ohm	0.117	0.316	1.16	1.72	2.24	6.61	10.2	16.0	24.9	37.1	76.6
9	Max. permissible speed	rpm	8200	8200	8200	8200	8200	8200	8200	8200	8200	8200	8200
10	Max. continuous current	A	6.00	6.00	3.33	2.75	2.41	1.41	1.13	0.904	0.725	0.594	0.414
11	Max. continuous torque	mNm	98.7	181	201	196	198	193	192	193	193	191	190
12	Max. power output at nominal voltage	W	285	440	491	332	255	86.5	55.7	35.6	22.9	15.3	7.40
13	Max. efficiency	%	88	91	92	91	91	89	88	87	86	85	83
14	Torque constant	mNm/A	16.4	30.2	60.3	71.3	82.2	137	170	214	266	321	461
15	Speed constant	rpm/V	581	317	158	134	116	69.7	56.2	44.7	35.9	29.8	20.7
16	Mechanical time constant	ms	6	5	4	4	4	4	4	4	4	4	4
17	Rotor inertia	gcm^2	135	134	134	125	127	118	117	118	117	114	114
18	Terminal inductance	mH	0.02	0.08	0.33	0.46	0.61	1.70	2.62	4.14	6.40	9.31	19.20
19	Thermal resistance housing-ambient	K/W	4.7	4.7	4.7	4.7	4.7	4.7	4.7	4.7	4.7	4.7	4.7
20	Thermal resistance rotor-housing	K/W	1.9	1.9	1.9	1.9	1.9	1.9	1.9	1.9	1.9	1.9	1.9
21	Thermal time constant winding	s	41	40	40	38	38	36	35	35	35	34	34

Specifications

- Axial play 0.05 - 0.15 mm
- Max. **ball bearing** loads
  axial (dynamic)
  not preloaded 5.6 N
  preloaded 2.4 N
  radial (5 mm from flange) 28 N
  Press-fit force (static) 110 N
  (static, shaft supported) 1200 N
- Radial play **ball bearings** 0.025 mm
- Ambient temperature range -20/+100°C
- Max. rotor temperature +155°C
- Number of commutator segments 13
- Weight of motor 480 g
- Values listed in the table are nominal.
  For applicable tolerances (see page 43) and additional details please request out of the maxon selection program on the settled CD-Rom.

Operating Range

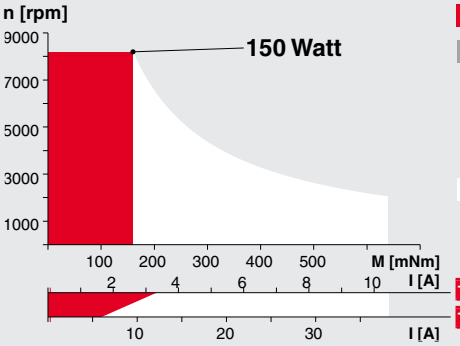

Comments Details on page 49

Recommended operating range

Continuous operation
In observation of above listed thermal resistances (lines 19 and 20) the maximum permissible rotor temperature will be reached during continuous operation at 25°C ambient.
= Thermal limit.

Short term operation
The motor may be briefly overloaded (recurring).

148877 Motor with high resistance winding
148866 Motor with low resistance winding

maxon Modular System

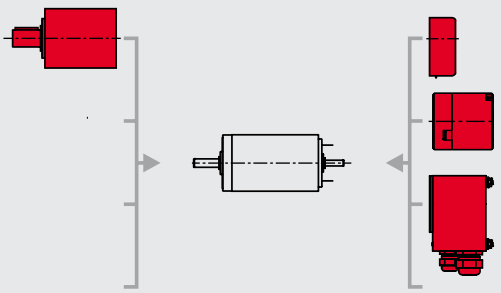

Planetary Gearhead
∅42 mm
3-15 Nm
Details page 195

Digital Encoder
HP HED_ 55__
500 CPT, 3 channels
Details page 204/206

Brake
∅40 mm
24 VDC, 0.4 Nm
Details page 232

Industrial version
Encoder
Details page 208
Brake
Details page 233