THESE DRAWINGS ARE THE PROPERTY OF QUALTEK ELECTRONICS AND NOT TO BE REPRODUCED FOR OR COMMUNICATED TO A THIRD PARTY WITHOUT THE EXPRESS WRITTEN PERMISSION OF AN OFFICER OF QUALTEK ELECTRONICS.

REVISION			
REV.	DESCRIPTION	DATE	APPROVED
B	RoHS Compliancy	06-01-06	DP

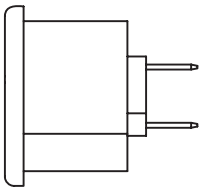

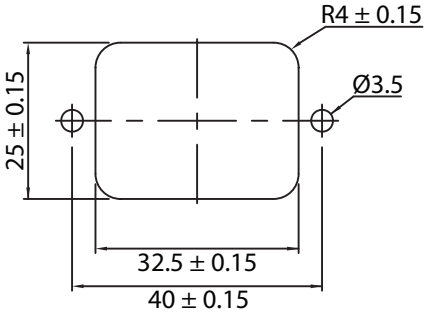

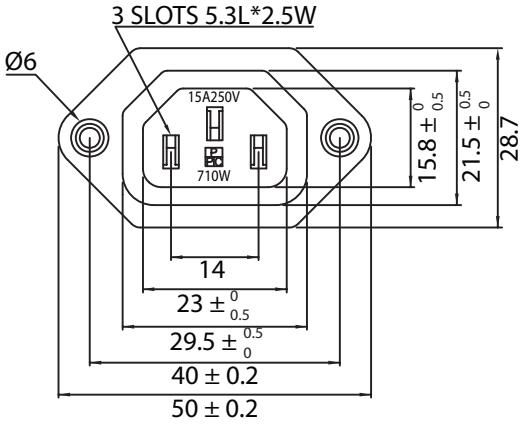

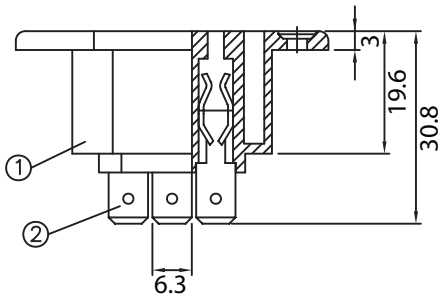

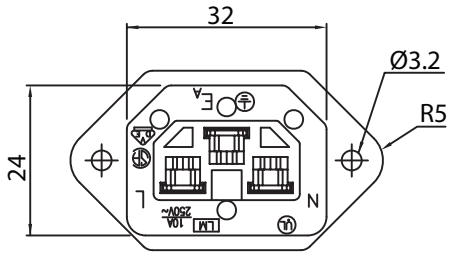

CONTROLLED

NOTES:

MATERIAL:
- HOUSING: THERMOPLASTIC
- TERMINAL: COPPER ALLOY

RATING:
- UL, CSA: 15A 250V AC
- VDE: 10A 250V AC

INSULATION RESISTANCE: OVER 100 OHM 500V DC
DIELECTRIC STRENGTH: 2000V AC ONE MINUTE
APPROVALS: UL, CSA, VDE
RoHS COMPLIANT

2	Soldering PIN Brass Strip t=0.8mm NI-Plated	3
1	Body Insulator PBT Black	1

Dim range (mm)	Tolerance +/- (mm)
0-1	0.15
1-6	0.20
6-18	0.30
18-50	0.50
50-120	0.70
120-250	0.90
250-500	1.20

Qualtek Electronics Corp.
PPC DIVISION

Part Number: 710W-00/03 RoHS Compliant

Description: AC RECEPTACLE

	UNIT: mm	REV. B
Drawn / Date	Checked / Date	Approved / Date
B. ZHANG 03-01-04	03-01-04	JJH / 03-01-04