Tubeaxial Finger Guards

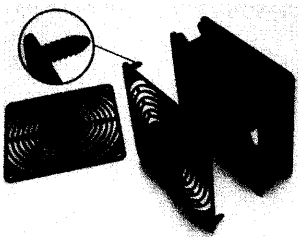

Plastic Guards
Series 4000 & 9000
Thru Holes – 92165-2-2929 **a = 4.1 (105)** **b = 4.7 (119)**
with Barbs – 92164-2-2929

Models W2G115 & W2K121
Thru Holes – 88601-2-2929 **a = 4.5 (113)** **b = 5.0 (127)**
with Barbs – 88602-2-2929

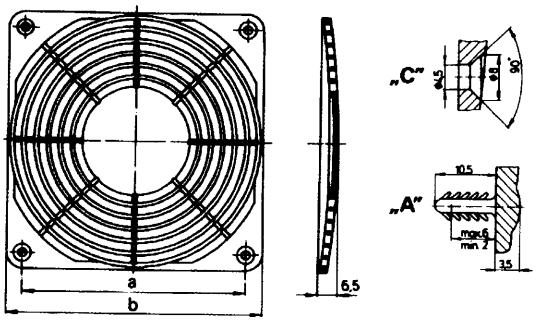

Finger Guard LZ25 Welded, zinc-plated steel wire, 1.4 mm diameter.

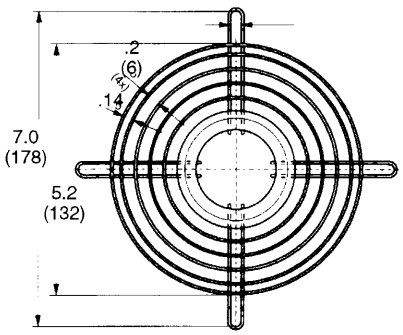

Part # 9496-2-4039
for W2G115 & W2S115

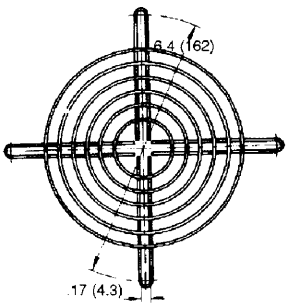

Part # 9498-2-4039
for W2G130 & W2S130

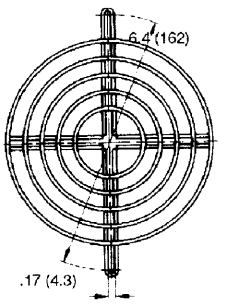

Part # 4013-2-4039
for W2E143

Part # 3749-2-4039
for W2E142

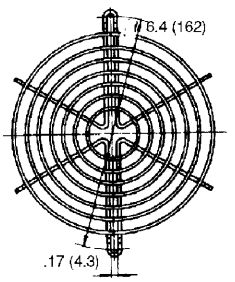
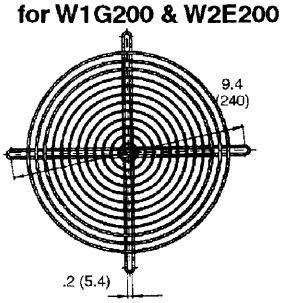
Part # 78128-2-4039
for W1G200 & W2E200